IB International Pty Ltd
PO Box 5481 Manly Qld 4179
Ph: 07 3348 8300 Fax: 07 3348 8900
Mob: 0408 379 619 Web: www.ibinternational.com.au

Junior teso 4°

Part Circle

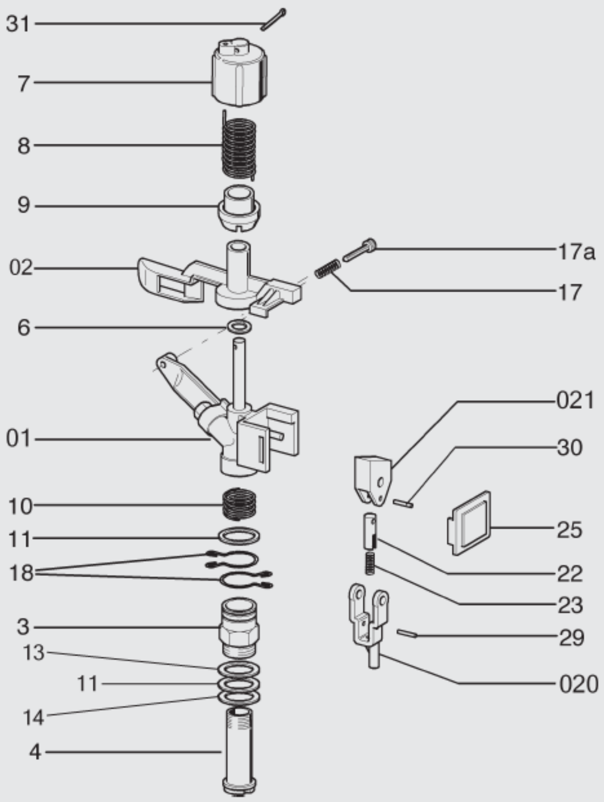

Full Circle

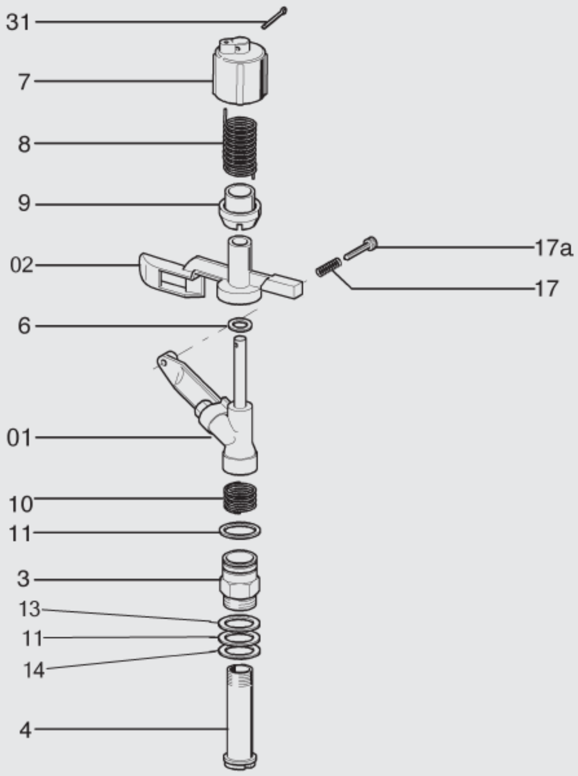

Spare parts: *When ordering spare parts, please specify type of sprinkler and code number.*

Data, weights and dimensions are not binding for the manufacturer, who reserves the right to bring changes as he sees fit.

Code	Fig No.	No.	Description	Code	Fig No.	No.	Description	Code	Fig No.	No.	Description